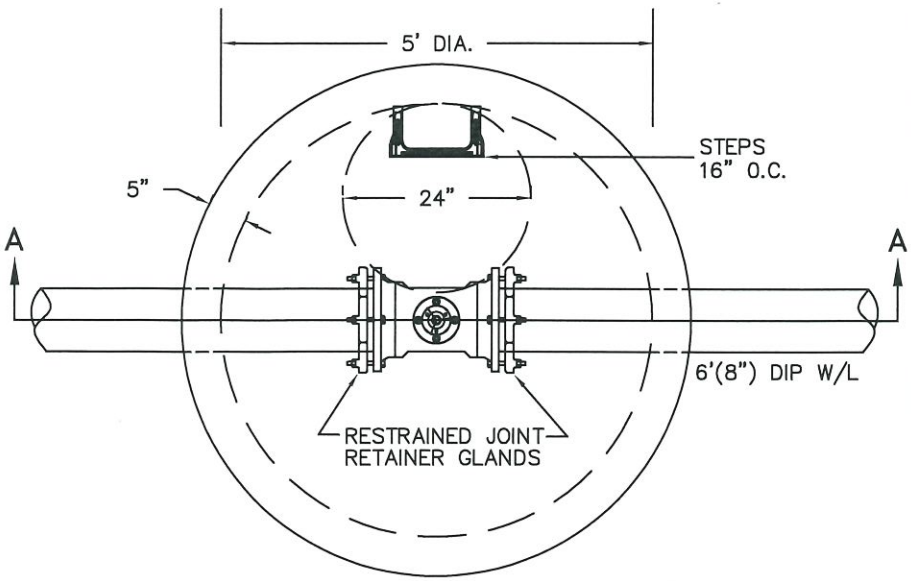

PLAN

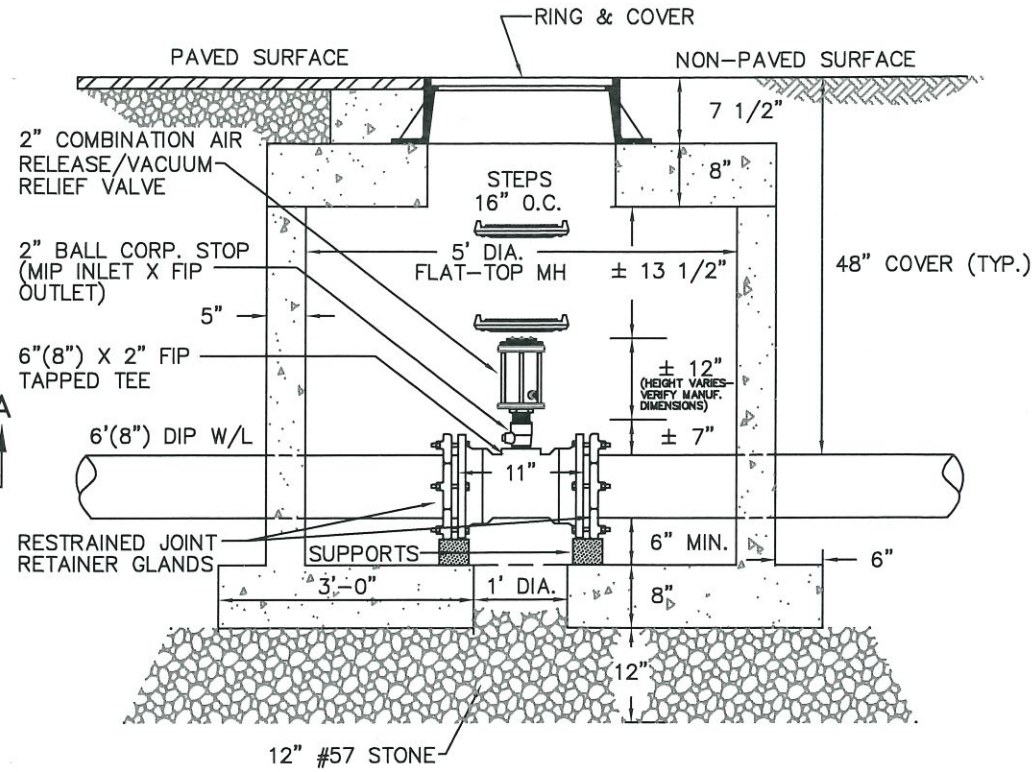

SECTION A-A

NOTES:
1. ALL SPECIFIED AIR VALVE SIZES SHALL BE DETERMINED BY THE DESIGN ENGINEER AND APPROVED BY THE DIRECTOR OF PUBLIC SERVICES.
2. BEFORE ASSEMBLY, THE CONTRACTOR SHALL VERIFY THAT ALL THE AIR VALVE ASSEMBLY WILL FIT WITHIN THE MANHOLE DIMENSIONS.
3. RING & COVER SHALL MEET CITY STANDARD NO. 307.00.
4. APPROVED PRODUCTS INCLUDE:
   2" COMBINATION AIR RELEASE/VACUUM RELIEF VALVE:
   - VENT-TECH MODEL 02WTR25TCS
   - OR APPROVED EQUAL

   2" BALL CORPORATION STOP:
   - FORD FB1700-NL SERIES
   - MUELLER B-20046N SERIES
   - AY McDONALD 73149B SERIES
   - OR APPROVED EQUAL

CITY OF HIGH POINT NORTH CAROLINA ENGINEERING SERVICES DEPARTMENT APPROVED JUNE 1, 20 22 DIRECTOR	ISSUED 02-01-07 REVISIONS 9-15-10 6-1-22	STANDARD DRAWING FOR 2" COMBINATION AIR RELEASE VALVE FOR WATER MAINS	2AIR.DWG 240.00 SHEET 1 OF 1